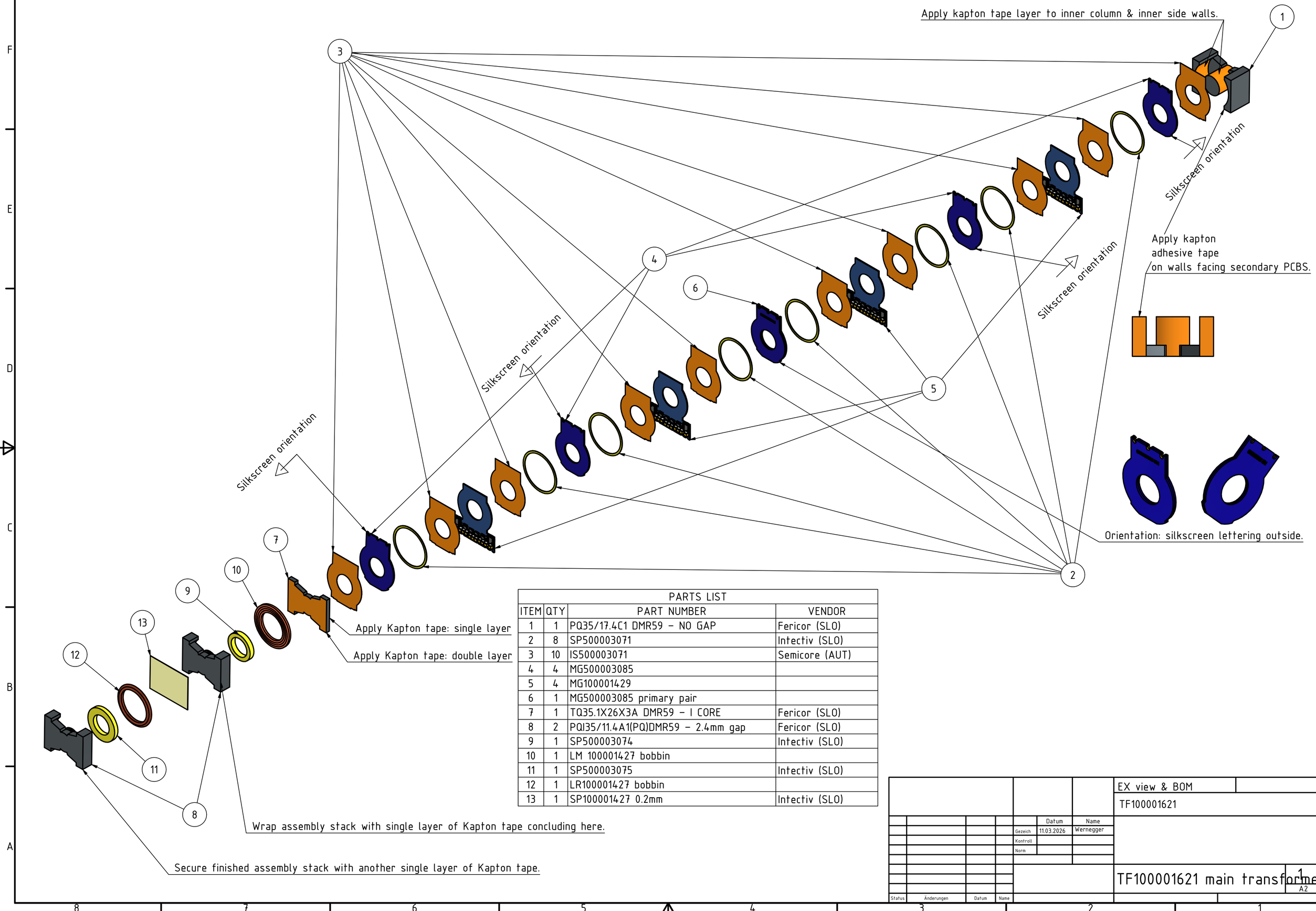

PARTS LIST

ITEM	QTY	PART NUMBER	VENDOR
1	1	PQ35/17.4C1 DMR59 – NO GAP	Fericor (SLO)
2	8	SP500003071	Intectiv (SLO)
3	10	IS500003071	Semicore (AUT)
4	4	MG500003085	
5	4	MG100001429	
6	1	MG500003085 primary pair	
7	1	TQ35.1X26X3A DMR59 – I CORE	Fericor (SLO)
8	2	PQI35/11.4A1(PQ)DMR59 – 2.4mm gap	Fericor (SLO)
9	1	SP500003074	Intectiv (SLO)
10	1	LM 100001427 bobbin	
11	1	SP500003075	Intectiv (SLO)
12	1	LR100001427 bobbin	
13	1	SP100001427 0.2mm	Intectiv (SLO)

EX view & BOM

TF100001621

	Datum	Name
Gezeich	11.03.2026	Wernegger
Kontroll		
Norm		

Status | Änderungen | Datum | Name

TF100001621 main transformer

1

A2

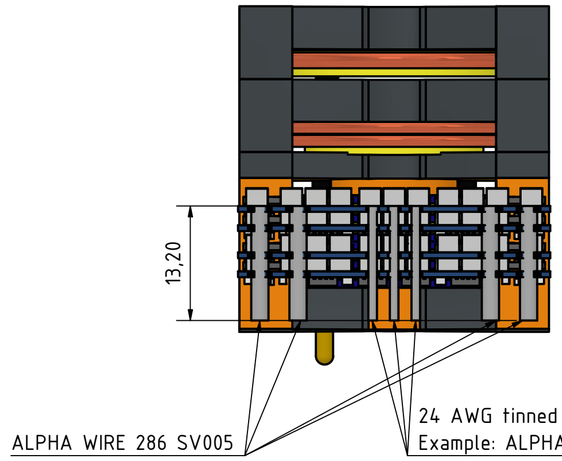

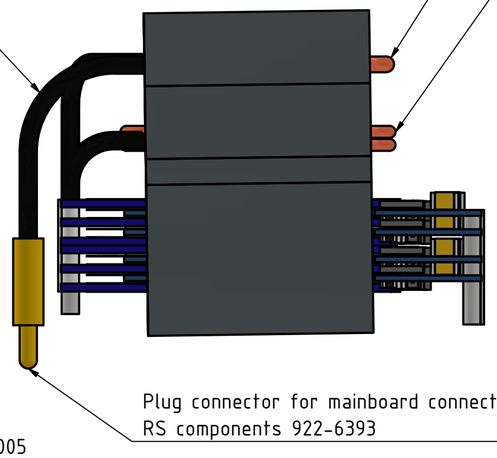

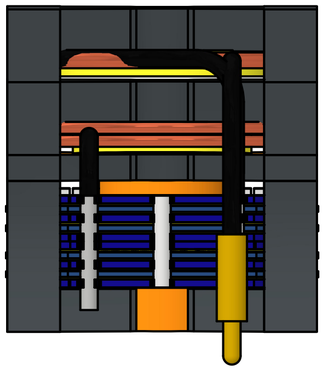

Dielectric strength:
Primary vs secondary: 3000V @ 50 Hz
Primary + secondary vs core: 500V @ 50 Hz
(Measurements to be done with transformer fully assembled!)
Measurement results:

- from pin 1 to pin 2 (Magnetizing inductance): ~101uH ± 5% @ 100 kHz
- from pin 3 to pin 4 (Lm): 9.97 uH ± 5% @ 500 kHz
- from pin 5 to pin 6 (Lr): 1.5 uH ± 5% @ 500 kHz

It is mandatory to calibrate the measuring device (open/short/load) prior to measurements!

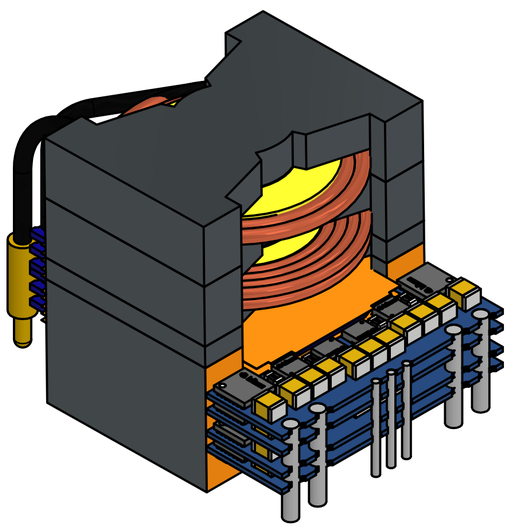

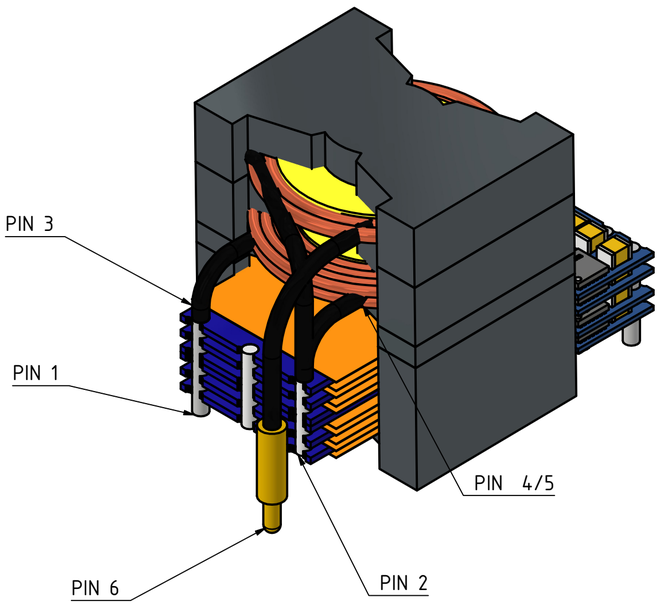

					Datum	Name
				Gezeich	11.03.2026	Wernegger
				Kontroll		
				Norm		
Status	Änderungen	Datum	Name			

TF100001621 main transformer

2

A2